4 to 8GHz – Drop in Isolator

Design Features

- Can be in dual junction or multi-junction for higher isolation.
- High RF performance, ultra-competitive price.
- Military, space and commercial applications.
- Custom design available upon request.
- Support one year standard warranty.

RF Characteristics

Model Number	Freq. Range (GHz)	Insertion Loss Max(dB)	Isolation Min(dB)	VSWR Max	Forward Power(W)	Reverse Power(W)	Connector Type	Temp.(°C)
UIYBDI2122A4T8	4.0 ~ 8.0	0.5	18	1.3	100	20	TAB	-55 ~ +85

- Listed are specific frequency ranges and tailor-made ranges are available.
- Please provide the information below when inquiring and mark * is must.
  - * 1. The specific frequency ranges
  - * 2. Power handling (Forward, Reverse, Peak, etc.)
  - 3. Other special requests (Insertion Loss, Isolation, VSWR, Temperature, Dimension etc.)

Mechanical Drawing

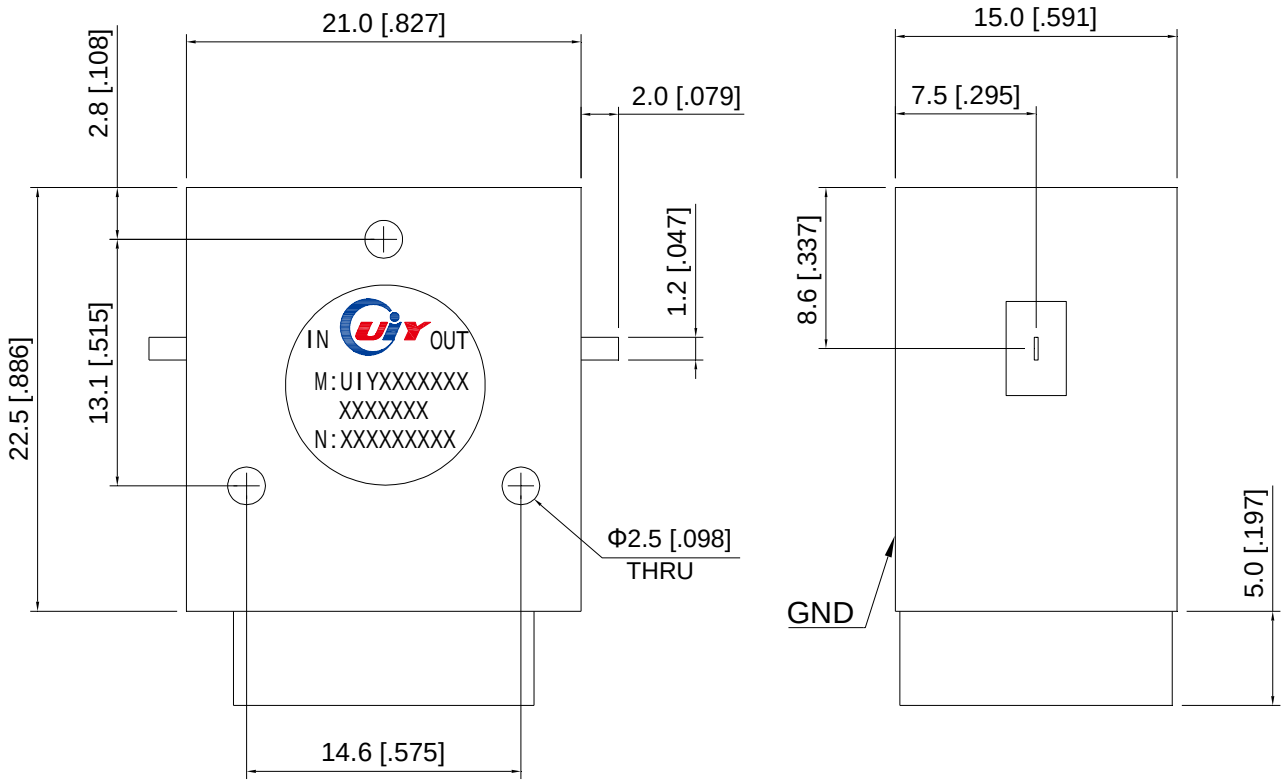

Unit: mm/ inch, General part tolerance is ±2% unless otherwise stated.

Ver. 5.1

No. 8, Lane 1, Xintun East Zone, Longgang District, Shenzhen 518172, China. Web: www.uiy.com
Tel: +86-755-83748888 +86-755-25999990 Fax: +86-755-25999959 E-mail: sales@uiy.com